# RP50n

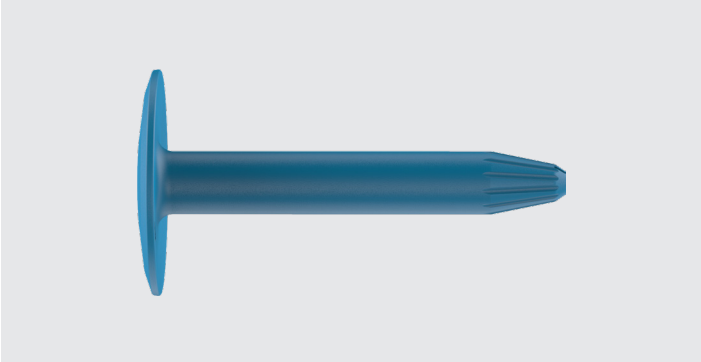

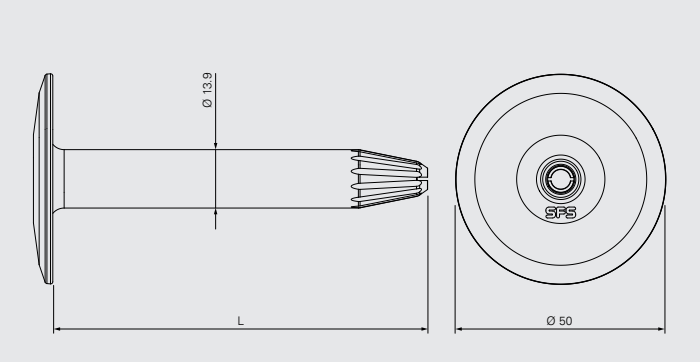


## Application

Sleeve for waterproof membrane and insulation securement.
For seam fastening application.
For use with installation tool IT260 and for manual installation.

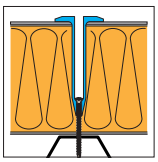

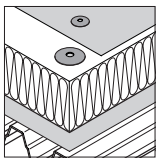

Overlap length between sleeve and fastener: 18 mm

## Product Information

Material: High quality polypropylen (PP)

## Approvals/Assessments

CE 23
ETA-23/0859

FM APPROVED

TEKNISK GODKJENNING TG 2137 SINTEF Certification

Declaration of Performance (DoP)



All information is non-binding and without guarantee. Before using the products, all specifications and calculations must be checked by a suitably qualified person and local regulations must be observed. This document is subject to revision. We reserve the right to make technical changes.

## Features and Benefits

- Multifunctional sleeve suitable for a wide fastener range
- 50 mm head diameter provides high design values
- Optimized sleeve tip for reduced penetration force
- Sleeve tip enables pre-assembly with different fasteners
- For IT260 installation tool

# Product Range

| Product Code | L mm | | PU | Material No. |
|---|---|---|---|---|
| RP50×20n | 20 | | 1500 | 1792831 |
| RP50×40n | 40 | | | 1713458 |
| RP50×60n | 60 | | | 1713459 |
| RP50×80n | 80 | | | 1792882 |
| RP50×90n | 90 | | | 1814915 |
| RP50×100n | 100 | | 1000 | 1713462 |
| RP50×120n | 120 | | | 1713463 |
| RP50×135n | 135 | | 750 | 1713464 |
| RP50×150n | 150 | | | 1713471 |
| RP50×180n | 180 | | 500 | 1713472 |
| RP50×210n | 210 | | | 1814916 |
| RP50×240n | 240 | | 250 | 1713479 |
| RP50×270n | 270 | | | 1713480 |
| RP50×300n | 300 | | | 1713481 |
| RP50×330n | 330 | | | 1713482 |
| RP50×380n* | 380 | | | 2175878 |
| RP50×430n* | 430 | | | 1713483 |
| RP50×480n* | 480 | | | 2175931 |
| RP50×530n* | 530 | | | 1713484 |
| RP50×580n* | 580 | | | 2175932 |
| RP50×630n* | 630 | | | 1713487 |
| RP50×730n* | 730 | | | 1713488 |

* With hexagon inner shaft

All information is non-binding and without guarantee. Before using the products, all specifications and calculations must be checked by a suitably qualified person and local regulations must be observed. This document is subject to revision. We reserve the right to make technical changes.

## Products to combine with

| Product Code | Description | |
|---|---|---|
| BS-4,8 | Carbon steel fastener for steel and timber substrates. | |
| BS-S-4,8 | Stainless steel fastener for steel and timber substrates. | |
| BS3-4,8 | Carbon steel fastener for thick steel substrates. | |
| BS-6,1 | Carbon steel fastener for steel and timber substrates. | |
| BS-S-6,1 | Stainless steel fastener for steel and timber substrates. | |
| DT-4,8 | Carbon steel impact anchor for concrete substrates. | |
| DT-S-4,8 | Stainless steel impact anchor for concrete substrates. | |
| TI-T25-6,3 | Carbon steel fastener for concrete substrates. | |
| TIA-T25-6,3 | Adjustable carbon steel fastener for tapered insulation on concrete substrates. | |
| TS-T25-6,0 | Carbon steel fastener for timber and concrete substrates. | |



All information is non-binding and without guarantee. Before using the products, all specifications and calculations must be checked by a suitably qualified person and local regulations must be observed. This document is subject to revision. We reserve the right to make technical changes.

## Tools and Accessories

| Product Code | Description | |
|---|---|---|
| IT260 | Automated setting tool for the fast and economic installation of fasteners and sleeves.<br>For pre-assembled combination of fasteners BS-4,8, BS3-4,8, BS-S-4,8 and sleeve RP50n.<br>Sleeve length max. 150 mm, total roof build-up max. 260 mm. | |
| ZA¼"-M6-300<br>ZA¼"-M6-750 | Drive bar for installation of fastener and sleeve, length 300 mm and 750 mm | |
| ZA¼"-M6-EXT100 | Drive bar extension, length 100 mm | |
| T25-32-M6-RINGn | Insert bit with T25 drive and ring to hold sleeves RP48n, RP50n, RP75n onto bit | |
| AJ-M6 | Bit for height adjustment of sleeve in combination with fasteners TIA-T25-6,3 and TIF-N-6,3 | |

All information is non-binding and without guarantee. Before using the products, all specifications and calculations must be checked by a suitably qualified person and local regulations must be observed. This document is subject to revision. We reserve the right to make technical changes.